THE ART OF COMFORT
vangogh DESIGNS

Costanza Sectional Planner

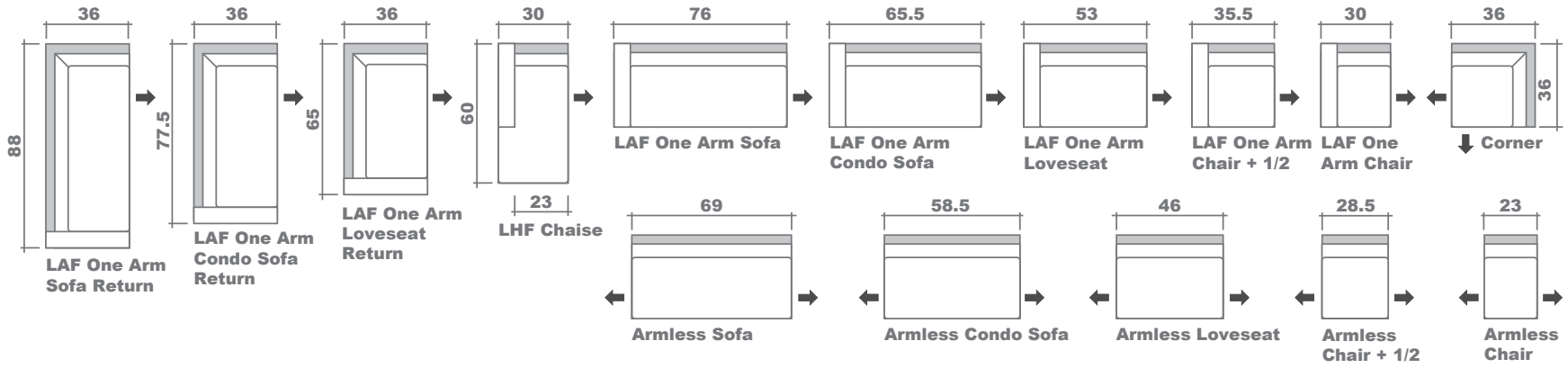

Configuration Suggestions

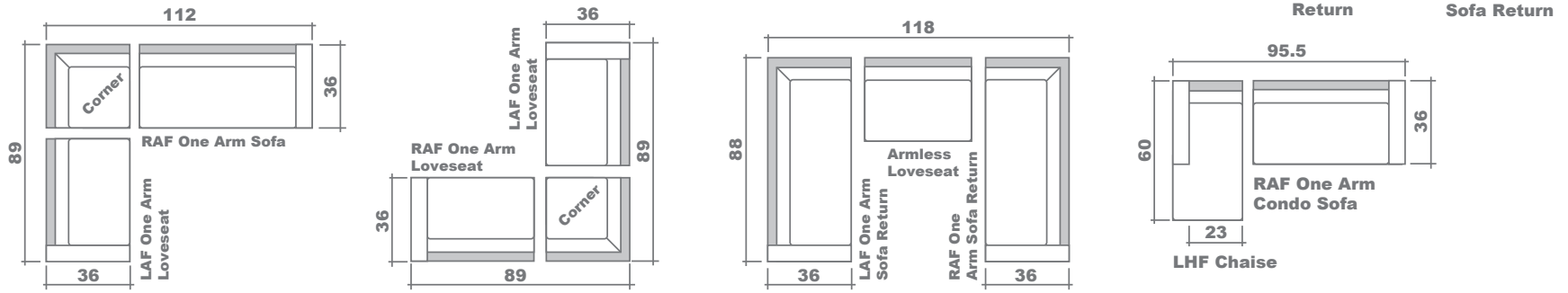

GENERAL INFORMATION:

*dye-lot of the actual fabric and the swatch may not be exact match
*fabric yardage for plain, railroaded 54" bolt
*no zipper/inserts in fibre filled toss pillows
*overall dimensions may vary +/- 1"
*see fabric swatch for exact colour

FABRIC	(YDS)
One Arm Sofa Return:	13.50
One Arm Sofa:	11.25
One Arm Condo Sofa Return:	12.00
One Arm Condo Sofa:	10.25
One Arm Loveseat Return:	10.75
One Arm Loveseat:	8.75
One Arm Chair + 1/2:	6.50
One Arm Chair:	6.00

FABRIC	(YDS)
Armless Sofa:	10.50
Armless Condo Sofa:	9.25
Armless Loveseat:	7.75
Armless Chair +1/2:	5.50
Armless Chair:	4.75
Chaise:	10.00
Corner:	8.00

VGD/CATG/COSTANZSA SECTIONAL Rev.1(c), Aug 11, 2016